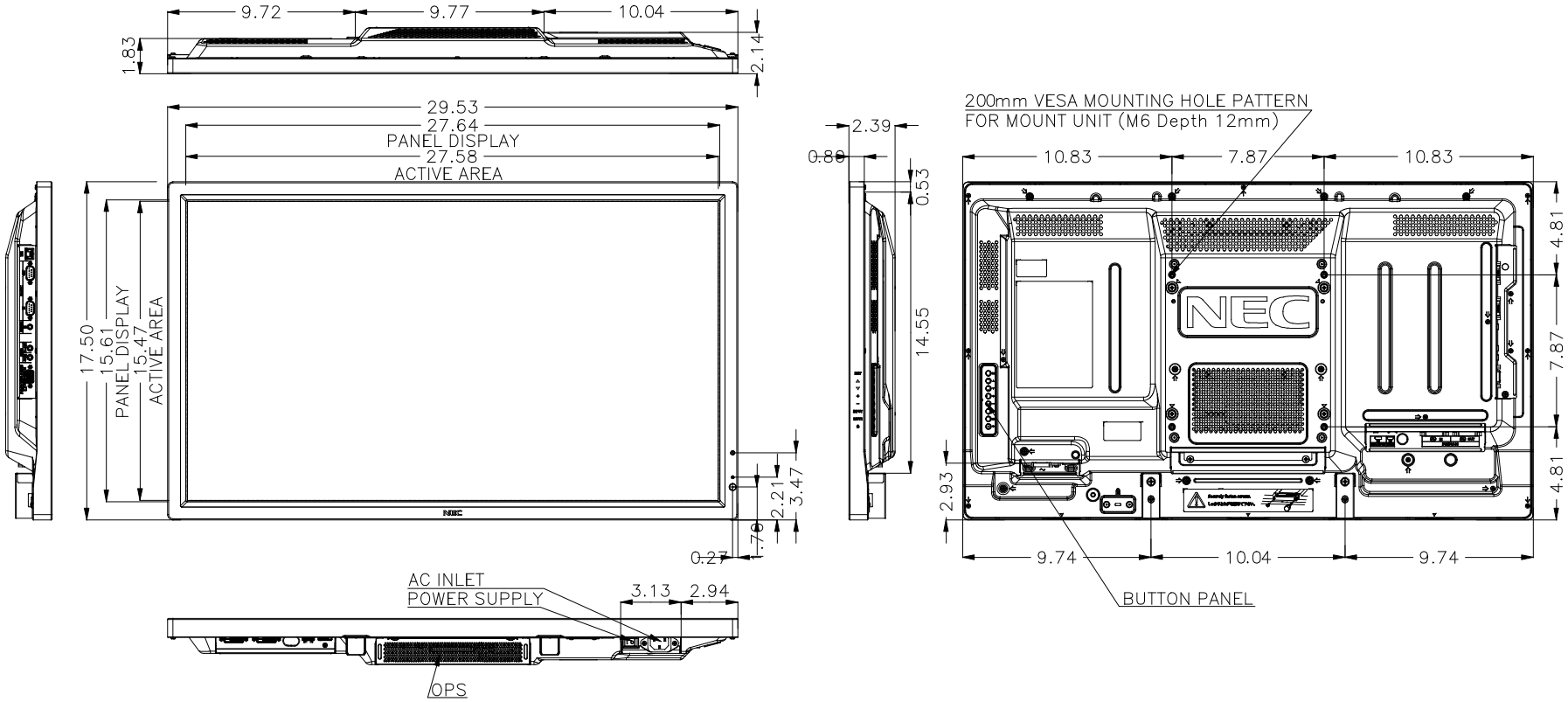

THE INFORMATION AND DESIGNS CONTAINED IN THIS DRAWING ARE CONFIDENTIAL AND THE PROPRIETARY PROPERTY OF NEC DISPLAY SOLUTIONS. NEITHER THIS DESIGN NOR ANY INFORMATION CONTAINED IN THIS DRAWING MAY BE REPRODUCED OR DISCLOSED TO OTHERS WITHOUT THE EXPRESS WRITTEN CONSENT OF NEC DISPLAY SOLUTIONS.
DISTANCES MAY VARY UP TO 5%.

Model: V323-3

Scale: 1:1

Unit: Inches

NEC
500 Park Boulevard, Suite 1100
Itasca, IL 60143
Telephone: (630) 467-3000